300 SERIES KJC SWIVEL JOINT

Operating Condition

Size Range : 10A~100A (⅜″~4″)
Max. Pressure : 40kg/cm² (560PSI)
Max. Temperature :
100℃ (210℉) NBR Packing
180℃ (360℉) Viton Packing
Media : Air, Oil, Water

Features / 특징

- O-ring Seal
- Double row steel balls, supporting pressure compensation
- Extended service life by Precision processing

- Series KJ300은 O-Ring Seal 형식이며 압력에 대한 보상은 2줄 강구에 의해 지지되며 특히 정밀가공으로 안정된 수명을 보장합니다.

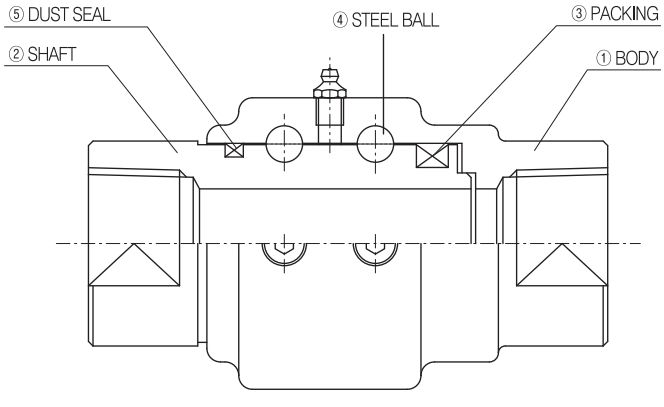

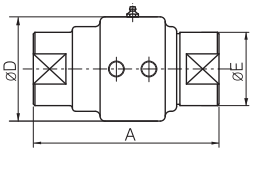

Type A

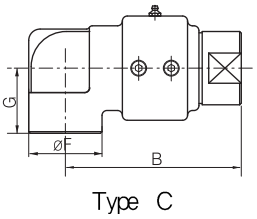

Type C

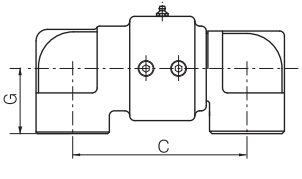

Type D

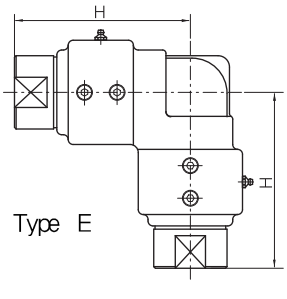

Type E

(Unit : mm)

Nominal Size		A	B	C	D	E	F	G	H
10A	⅜″	86	73	74	48	34	30	30	73
15A	½″	86	73	74	48	34	30	30	73
20A	¾″	114	108	107	64	48	45	40	108
25A	1″	114	108	107	64	48	45	40	108
32A	1¼″	117	114	110	78	66	60	50	114
40A	1½″	117	114	110	78	66	60	50	114
50A	2″	150	146	150	100	80	80	70	145
65A	2½″	155	146	161	120	92	92	80	146
80A	3″	212	220	223	148	110	110	100	199
100A	4″	230	259	269	180	140	140	120	235

400 SERIES KJC SWIVEL JOINT

Operating Condition

Size Range : 10A~100A (3/8″~4″)
Max. Pressure : 210kg/cm² (3000PSI)
Max. Temperature :
100℃ (210℉) NBR Packing
180℃ (360℉) Viton Packing
Media : Air, Oil, Water, Hydraulic Oil

Features / 특징

- Special Packing Seal
- Double row steel balls supporting pressure compensation
- Low Torque at High Pressure

- Series KJ400은 특수팩킹 Seal 형식이며 압력에 대한 보상은 2줄 강구에 의해 지지되며 고압에서도 낮은 Torque가 특징입니다.

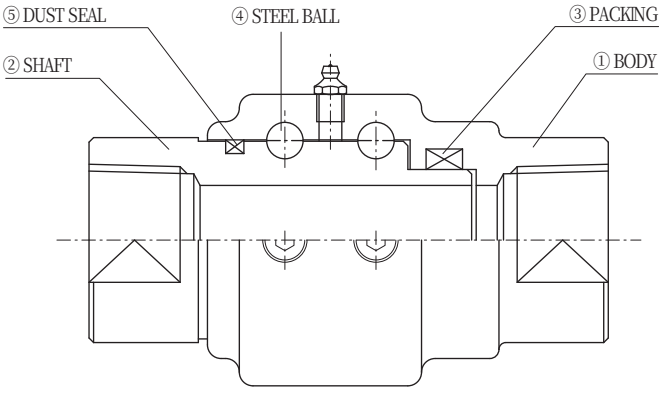

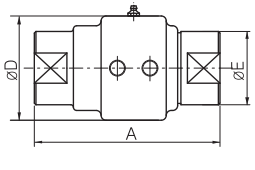

Type A

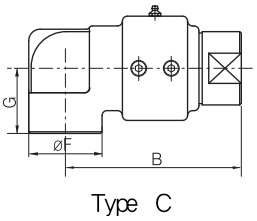

Type C

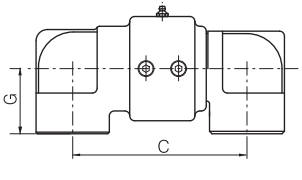

Type D

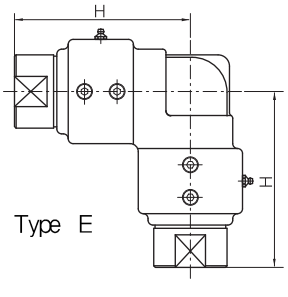

Type E

(Unit : mm)

Nominal Size		A	B	C	D	E	F	G	H
10A	3/8″	86	73	74	48	34	30	30	73
15A	1/2″	86	73	74	48	34	30	30	73
20A	3/4″	114	108	107	64	48	45	40	108
25A	1″	114	108	107	64	48	45	40	108
32A	1 1/4″	117	114	110	78	66	60	50	114
40A	1 1/2″	117	114	110	78	66	60	50	114
50A	2″	150	146	150	105	80	80	70	145
65A	2 1/2″	155	146	161	120	92	92	80	146
80A	3″	212	220	223	148	110	110	100	199
100A	4″	230	259	269	180	140	140	120	235