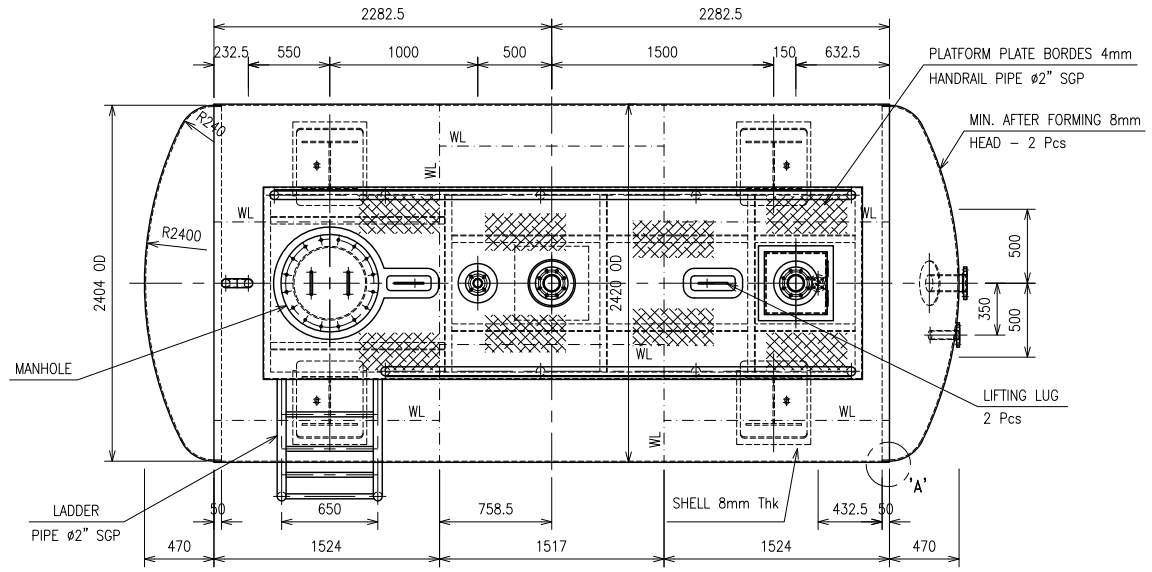

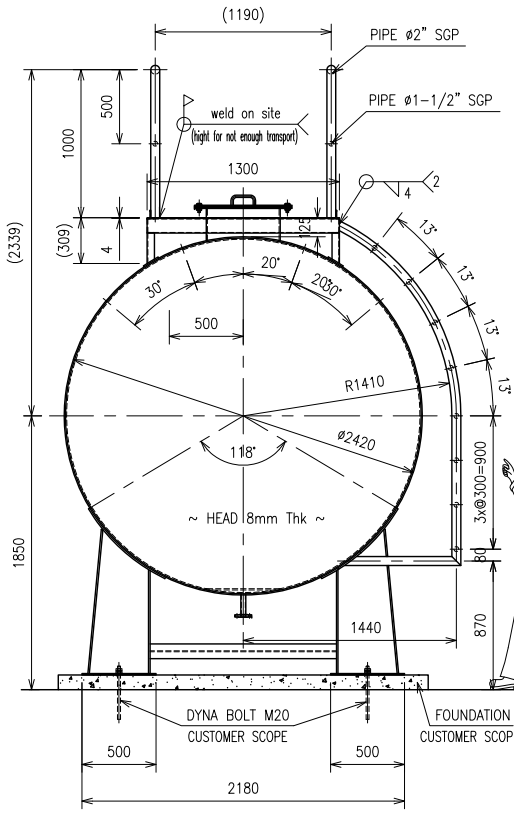

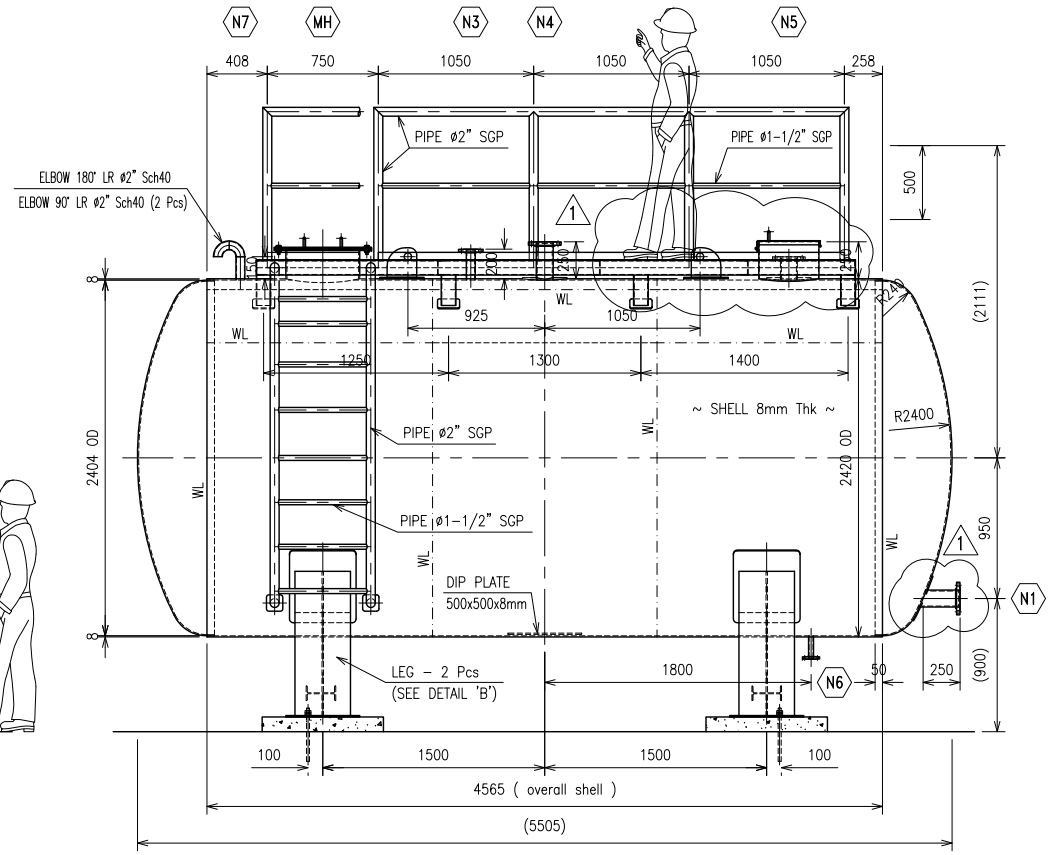

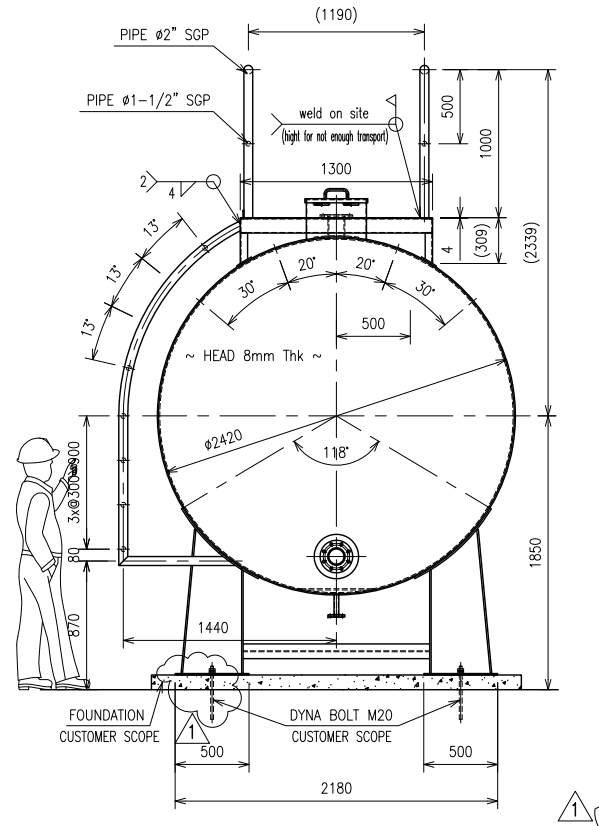

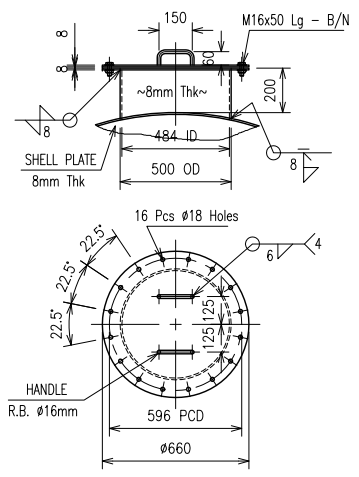

DETAIL OF MANHOLE

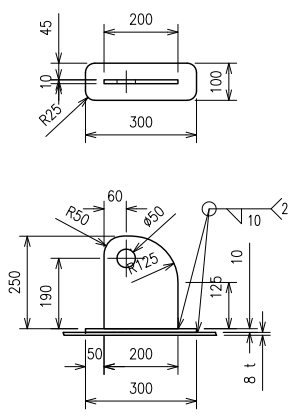

DETAIL OF LIFTING LUG

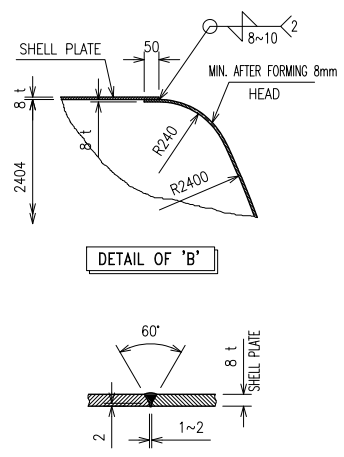

DETAIL OF 'B'

DETAIL JOINT SHELL TO SHELL

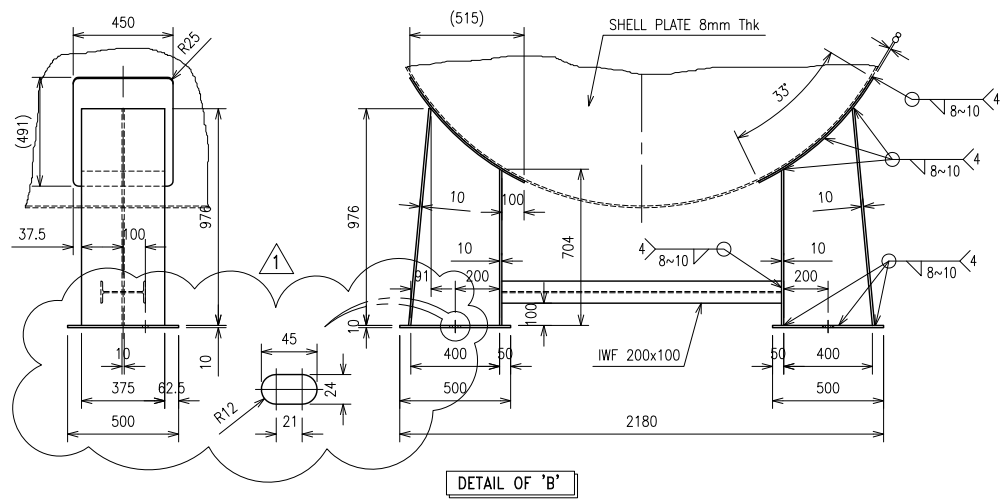

DETAIL OF 'B'

Revise	Description	Date	Drawn	Checked	Approved
0	First Issued for Construction	Sept,04.12	Wow	FJR	FJR
1	Revised From Customer for Construction	Sept,06.12	Wow	FJR	FJR

NOTE :
* FOR ALL REINFORCE PLATE USED PLATE 8 mm
* FOR SUPPORT LEGS USED PLATE 10 mm
* FOR PAINTING ONLY BRUSHING & PRIMER COAT
* FOR HANDRAIL WELD ON SITE BECAUSE VERY HIGHT TO TRANSPOTATION

ZUG Solution for Energy — CUSTOMER APPROVAL SIGN
DATE : NAME :

ZUG Solution for Energy — FOR CONSTRUCTION

No.	DWG No.	Description	QTY	Spec.	Material Size	Weight (Kg)	Remarks
6	–	PLATFORM LADDER	1	SS 400/CS	ASS'Y	–	–
5	–	NOZZLE	–	SS 400/CS	ASS'Y	–	–
4	–	LIFTING LUG	2	SS 400/CS	ASS'Y	–	–
3	–	LEGS	2	SS 400/CS	ASS'Y	–	–
2	–	HEAD	2	SS 400/CS	ASS'Y	–	–
1	–	SHELL	1	SS 400/CS	ASS'Y	–	–

COMPONENT LIST

Tabel	DWG No.	Description	QTY	Spec.	Material Size	Weight (Kg)	Remarks
MH	–	MANHOLE	1	ASS'Y	ø500	–	–
N7	–	VENTING	1	A106 Gr.B sch40	DN 50 JIS 10K	–	–
N6	–	DRAIN	1	A106 Gr.B sch40	DN 25 JIS 10K	–	–
N5	–	INLET/OUTLET PUMP	1	A106 Gr.B sch40	DN 100 JIS 10K	–	–
N4	–	AGT	1	A106 Gr.B sch40	DN 100 JIS 10K	–	–
N3		DEEP STICK	1	A106 Gr.B sch40	DN 50 JIS 10K	–	–
N2	–	–	–	–	–	–	–
N1	–	INLET	1	A106 Gr.B sch40	DN 100 JIS 10K	–	–

PART LIST

Client : –
–

ZUG Solution for Energy
PT. ZUG INDUSTRY INDONESIA
Office/Workshop : Jl. Rawa Melati Blok AI No.5 Tegal Alur – Kalideres Jakarta – Indonesia 11820
Telp : (62-21) 55952077 (Hunting) Fax : (62-21) 55951873 E-mail : sales_zug@zug.co.id

Drawn Wow		Type	Horizontal Tank
Checked FJR		Title	ARRANGEMENT SOLAR TANK cap. 20 KL
Approved FJR		Dwg No.	Z-AS-ST 20KL-003
Issued	Sept,05.12	Reff. Dwg No.	–
Scale	1 : 50	Status	P12.003
Units	mm	Sheet No.	1 of 2

Rev. : 1
Size : A3