INSTALLATION INSTRUCTIONS FOR HEX CABLE GLAND TYPE "HA2F"

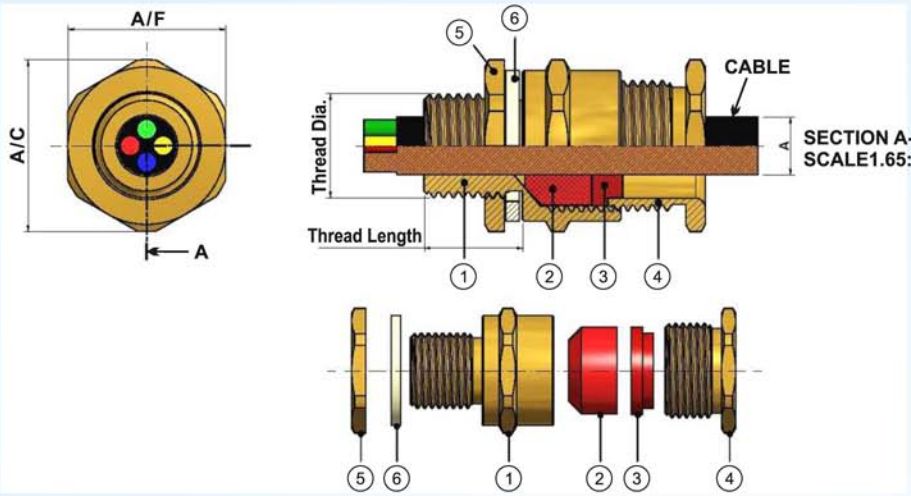

CE 1354 Ex II 2 GD

EX db IIC Gb - 60°C≤Tamb≤+125°C

EX tb IIIC Db IP66 - 60°C≤Tamb≤+125°C

T1 17ATEX45 X

PRODUCT CODE FOR ORDERING PURPOSE

H A2F M 20 B NP

- **H** — HEX BRAND
- **A2F** — Gland Type
- **M** — Thread Type: M = Metric, N = NPT
- **20** — Gland Size
- **B** — Material: B = Brass, S = Steel
- **NP** — Plating: NP-Nickle Plating; Without Plating, or blank

PARTS LIST			
ITEM	QTY	DESCRIPTION	MATERIAL
1	1	ENTRY COMPONENT	BRASS OR S.S.
2	1	SEALING WASHER	SIL1960 (SILICON)
3	1	OUTER SUBSTRATE	NYLON
4	1	SEAL NUT	BRASS OR S.S.
5	1	LOCK NUT	BRASS OR S.S.
6	1	THREAD SEAL	NYLON

Cable Gland Size	Standard Entry Thread		Entry Thread				Cable diameter		Entry Component & Seal Nut		Assembly Length		Torque (Nm)
			Metric		NPT		Dia A						
	Metric	NPT	Dia.	Length	Dia.	Length	Min	Max	Across Flat	Across Corner	Compressed	Uncompressed	
16	M16x1.5	½"	16.00	15.00	21.34	15.00	3.10	8.60	24.00	26.20	32.75	42.30	25
20s	M20x1.5	½"	20.00	15.00	21.34	15.00	6.10	11.60	24.00	26.20	32.50	42.25	25
20	M20x1.5	½"	20.00	15.00	21.34	15.00	6.50	13.90	27.00	29.50	33.00	42.50	25
25	M25x1.5	¾"	25.00	15.00	26.65	15.00	11.10	19.90	36.00	39.20	38.50	51.40	30
32	M32x1.5	1"	32.00	15.00	33.40	15.00	17.00	26.20	41.00	45.00	40.00	52.30	32
40	M40x1.5	1.¼"	40.00	15.00	42.15	15.00	22.00	32.10	50.00	55.00	39.25	52.25	35
50s	M50sx1.5	1.½"	50.00	15.00	48.20	15.00	29.50	38.10	55.00	60.00	37.25	51.25	60
50	M50x1.5	2"	50.00	15.00	60.30	15.00	35.60	44.00	60.00	65.00	40.25	53.50	65
63s	M63sx1.5	2"	63.00	15.00	60.30	15.00	40.10	49.90	70.00	75.00	38.00	51.50	65
63	M63x1.5	2.½"	63.00	15.00	73.00	15.00	47.20	55.90	75.00	80.00	39.50	53.40	75
75s	M75sx1.5	2.½"	75.00	15.00	73.00	15.00	52.80	61.90	80.00	85.00	39.50	57.40	80
75	M75x1.5	3"	75.00	15.00	88.80	15.00	59.10	67.90	85.00	90.00	41.00	59.30	80
90	M90x1.5	3"	90.00	18.00	88.80	18.00	78.60	79.90	110.00	118.00	57.00	65.20	110