XD SERIES
SELF-PROPELLED ROUGH TERRAIN SCISSOR LIFT

Standard Features

- Foldable guardrail
- Diagnosis system
- AC wiring to platform
- 4 wheel drive
- Tilt level sensor with an audible alarm
- Lowering alarm
- Horn
- Hour meter
- Emergency pump
- Proportional controls
- Solid rough tire
- Safety brackets

Options Features

- Automatic leveling hydraulic outriggers
- Air line to platform
- DC power supply
- Motor cold starting components
- Overload sensor
- Dual flashing beacon
- Moveable alarm components
- Non-mark rough tire

Models	XD100RT	XD120RT	XD140RT
Working height max (m)H1	10	12	14
Platform height max (m)H2	8	10	12
(1)Platform height min (m)(1)	1.1	1.23	1.36
(2)Outreach (m)(2)	1.5	1.5	1.5
Lifting capacity (kg)	567	454	345
Lifting capacity (kg) (Extended platform)	136	136	136
Platform Size			
(3)Lateral length (m)(3)	2.5	2.5	2.5
(4)Extended length (m)(4)	4	4	4
(5)Lateral width (m)(5)	1.6	1.6	1.6
(6)Fence height (m)(6)	1.15	1.15	1.15
(7)Skirting board height (m)(7)	0.15	0.15	0.15
Stowed size			
(8)Stowed length (m)(8)	2.67	2.66	2.67
(9)Width (m)(9)	1.75	2.67	1.75
(10)Height (m)(10)	2.38	1.75	2.6
(11)Folded height (m)(11)	1.68	2.5	1.98
(12)Wheelbase (m)(12)	1.85	1.85	1.85
Ground clearance (m)(13)	0.17	0.17	0.17
Turn diameter (m) (inside)	1.52	1.52	1.52
Turn diameter (m) (outside)	3.68	3.68	3.68
Load number max	3	3	3
Raised time (s)	30	40	50
Lowering time (s)	40	43	47
Traction speed (km/h)	6.1	6.1	6.1
Safe speed (km/h)	0.8	0.8	0.8
Vertical tilt°	3	3	3
Lateral tilt°	2	2	2
Control	Proportional control		
Drive	4 wheels drive		
Weight (kg)	3280	3880	4200
Weight (kg) (with outriggers)	3680	4280	4600
Power source	Kubota D1105		
Hydraulic tank capacity (L)	68	68	68
Feul tank capacity (L)	57	57	57
Gradeability	35%	30%	30%
*Outrigger level ability max			
Front to rear	6.6	6.6	6.6
Left to right	10.6	10.6	10.6
Tire size (mm)	Solid tires26*12–16.5		

XD Working Range

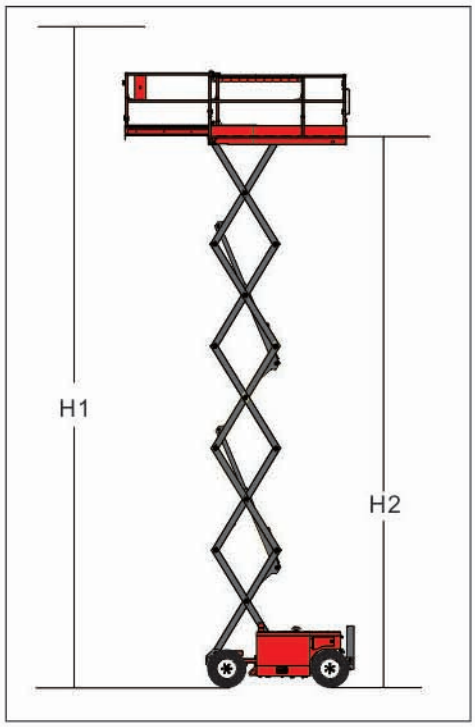

XD Collecting Chart

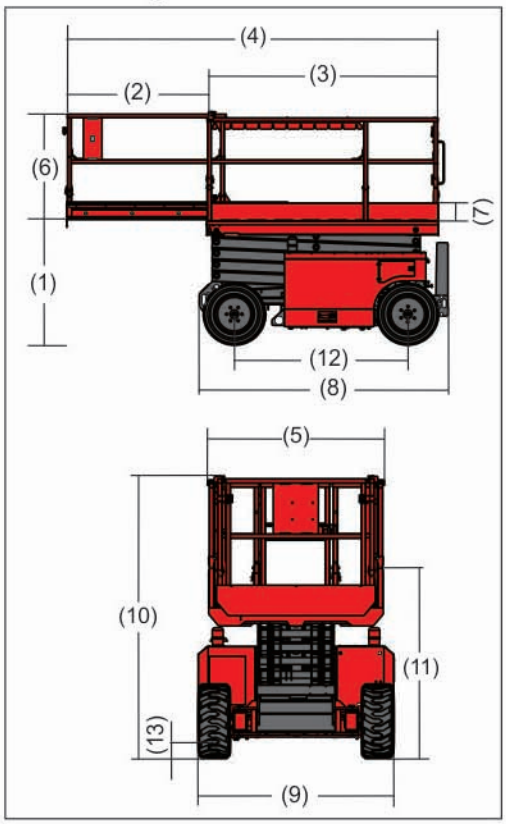

*The metric system height is 2 meters higher than platform height,the imperial height is 6 feet than platform height

**CE/AU market, XD can be used in indoor and outdoor, to accommodate two person

***Climbing ability is suitable for driving on the slope, the slope classification reference operation manual

****Weight according to the options and standards vary from country to country