XE MINI SERIES

ELECTRIC SELF-PROPELLED SCISSOR LIFT

Standard Features

- Proportional controls
- Self-lock gate on platform
- Extended platform
- Drivable at full height
- Non marking tire
- 4×2WD
- Explosion-proof of the tubing
- Automatic brake system
- Emergency lowering system
- Emergency stop button
- Tilt sensor with alarm
- All motion alarm
- Horn
- Hour meter
- Safety brackets
- Forklift pockets
- Charger protection
- Flashing beacon

Options Features

- Overload sensor with alarm
- AC power to platform
- Single extension platform

XE MINI SERIES

Models	XE50MINI/ED	XE60MINI/ED
	Metric system	Metric system
Working height max	5m	6m
Platform height max	3m	4m
Outreach max	0.55m	0.55m
Lifting capacity	240kg	240kg
Lifting capacity (Extended platform)	100kg	100kg
Weight	550kg	615kg
Platform size L	1.15m	1.15m
Platform size W	0.76m	0.76m
Platform size H	1.1m	1.1m
The length of platform extended	1.7m	1.7m
Skirting board height	0.15m	0.15m
Stowed size (L×W)	Metric system：1. 15m×0. 70m in ：3 ft 10 in *2 ft 4 in	
Stowed height	1.8m	1.9m
Length of the machine with platform extended	1.7m	1.7m
Hydraulic tank capacity (L)	2	2
Gradeability	25%	25%
Wheelbase	1m	1m
Ground clearance	0.06m	0.06m
Inside rotation radius	0m	0m
Load number max	2	2
Raised time/Lowering time(s)	28/24	35/31
Travel speed	3km/h	3km/h
Safe speed	0.8km/h	0.8km/h
Vertical tilt°	2	2
Lateral tilt°	1	1
Power source	24V/95AH	24V/95AH
Tire size	Solid tire230m	Solid tire230m

*The metric system height is 2 meters higher than platform height,the imperial height is 6 feet than platform height

**CE/AU market, XE - MINI can be used in indoor and outdoor, to accommodate one person

***Climbing ability is suitable for driving on the slope, the slope classification reference operation manual

****Weight according to the options and standards vary from country to country

XE-MINI Working Range

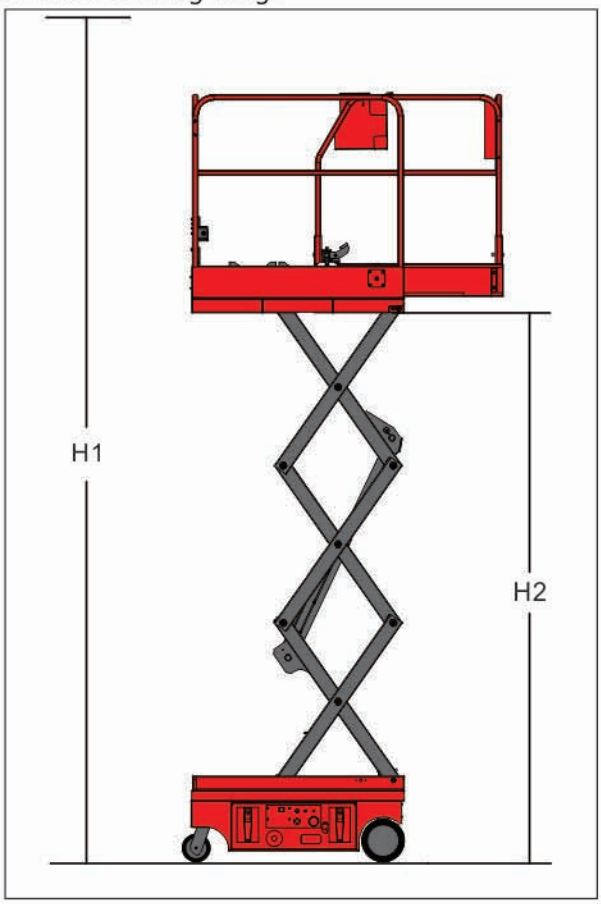
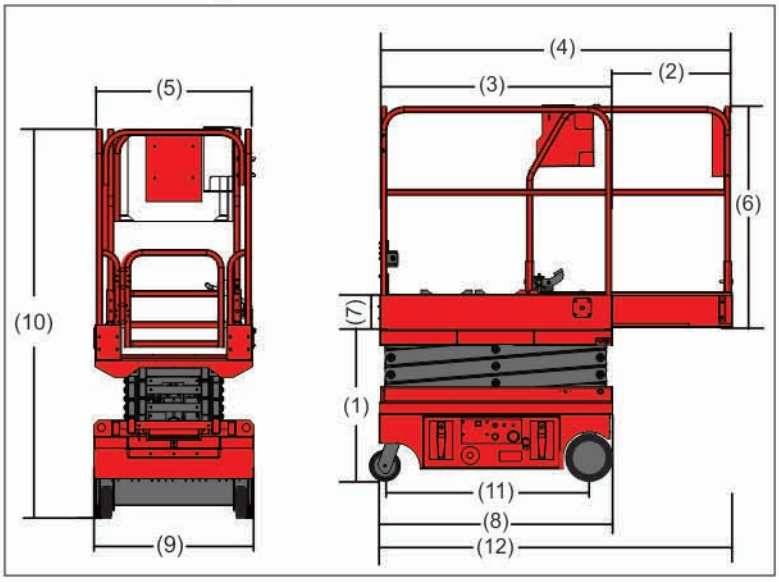
XE-MINI Collecting Chart