EBARA

PTO Indonesia

Certified System Quality ISO 9001 SAI GLOBAL

FS513CT-R0E

EBARA
END SUCTION VOLUTE PUMP

Model FSA

APPLICATION

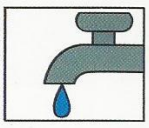

Water Supply
- Boosting pump System
- High-rise building

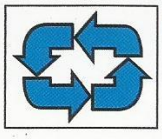

Water Circulation
- Circulating of water in Heating and cooling

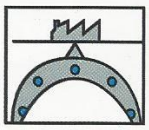

Industrial Use
- Liquid transfer

FEATURES

1. Easy removal and maintenance, BPO (Back Pull Out) system allows all rotating elements can be removed without disconnecting suction and discharge pioe work.
2. Top centreline discharge, foot support under casing for maximum resistance due to misalignment and distortions from pipe loads.
3. Non-overload design to ensure stable performance for all applications.
4. Wider range application with flow capacity up to 22 m^3/min.
5. Higher Working pressure up to 16 bar.

SPECIFICATION

DESCRIPTION		STANDARD		OPTIONAL	
		2 Poles Model	4 Poles Model	2 Poles Model	4 Poles Model
Liquid	Name	Clean Water			
	Temperature	0 To 80 ^{0}C (32 To 176 ^{0}F)			
Max. Working Pressure		10 Bar (10.2 Kgf/Cm^2) For Standard Flange JIS 10K RF		16 Bar (16.3 Kgf/Cm^2)	
		16 Bar (10.3 Kgf/Cm^2) For Standard Flange JIS 16K RF			
Synchronous Speed		3000 Min^{-1}	1500 Min^{-1}		
Installation		Indoors		Outdoors	
Construction	Impeller	Enclosed			
	Shaft Seal	Mechanical Seal		Gland Packing	
	Sealing	Self Flushing		External Flushing	
	Bearing	Sealed Ball Bearing		Oil Bath (Some Models Only)	
Flange	Suction & Discharge	Suction < ϕ 150 mm, Except Bellow : JIS 16K RF		16 Bar : JIS 16K RF; DIN PN-16	
		100x65 FSKA : JIS 16K RF		DIN PN-16	
		Suction = ϕ 150 mm, Except Bellow Models : JIS 16K RF		16 Bar : JIS 16K RF; DIN PN-16	
		150x100 FSKA; 150x100 FSNA : JIS 16K RF		DIN PN-16	
		Suction = ϕ 200 mm, Except Bellow Models : JIS 16K RF		16 Bar : JIS 16K RF; DIN PN-16	
		200x150 FSLA; 200x150 FSNA : JIS 16K RF		DIN PN-16	
		Suction = ϕ 250 mm : JIS 16K RF		DIN PN-16	
Material	Casing	Cast Iron		Ductile Cast Iron (FCD)	
	Impeller	Bronce Casting (CAC406/BC6)		Cast Iron; Ductile Cast Iron (FCD) (Some Models Only)	
	Shaft	403 Stainless Steel		304; 316 Stainless Steel	
	Seal	Mechanical Saal : Ceranic/ Carbon/ NBR		Gland Packing : Teflon (PTFE) Impregnated Mechanical Seal : Sic/Sic	
Accessories	Bare Shaft			Priming Funnel; Valve; Companion Flange	
	With Motor	Common Base, Coupling, Coupling Guard		Priming Funnel; Valve; Companion Flange	

MODEL CODE

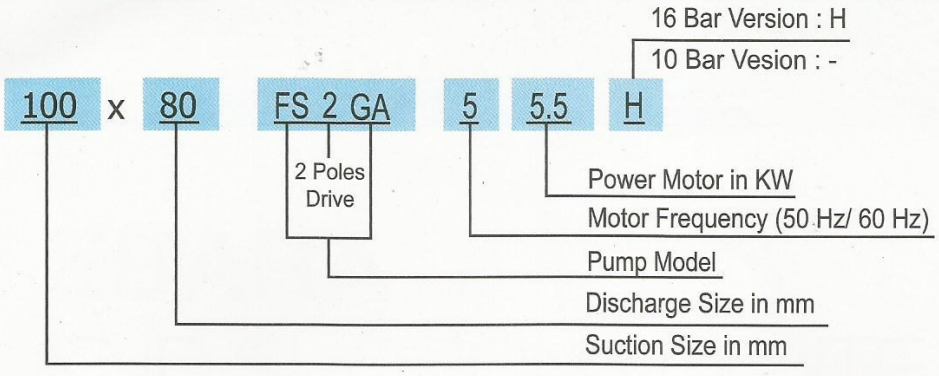

PERFORMANCE CHART

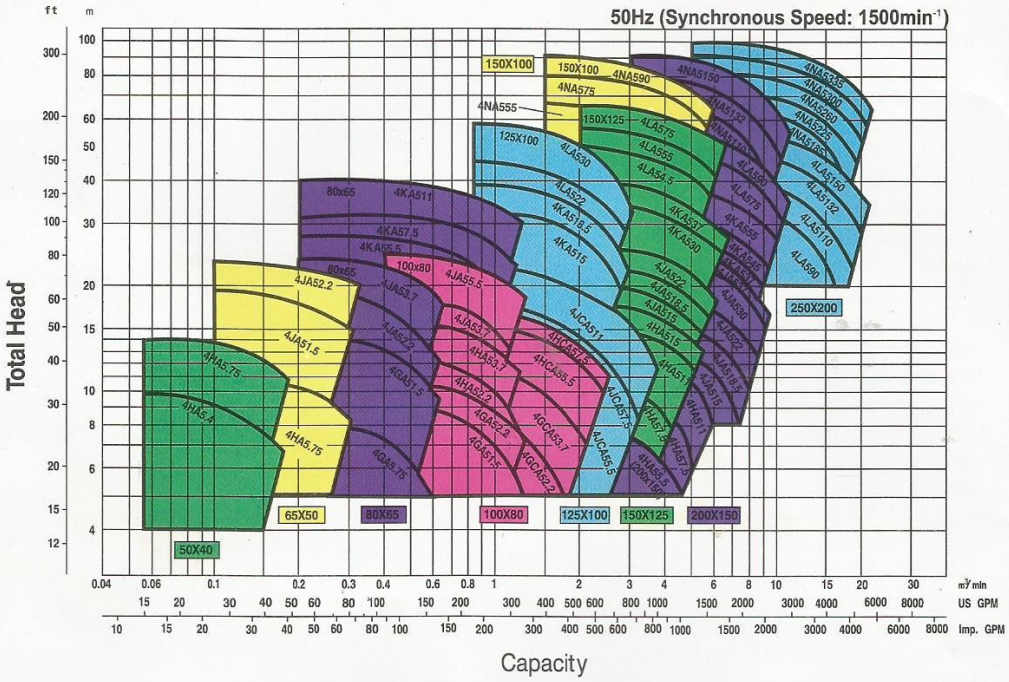

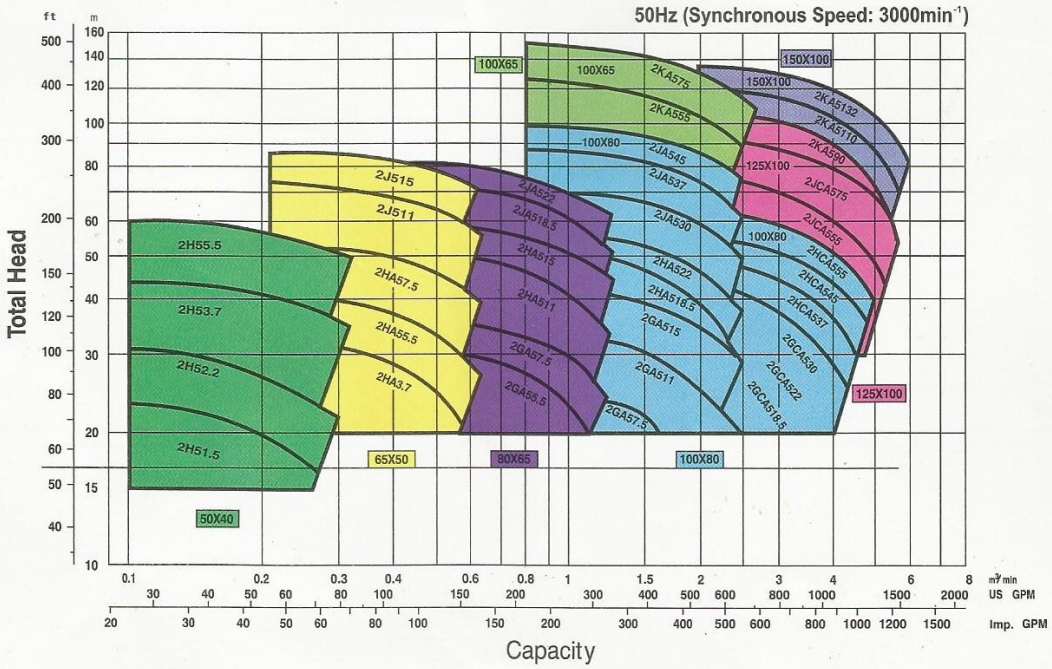

SECTIONAL VIEW (General)

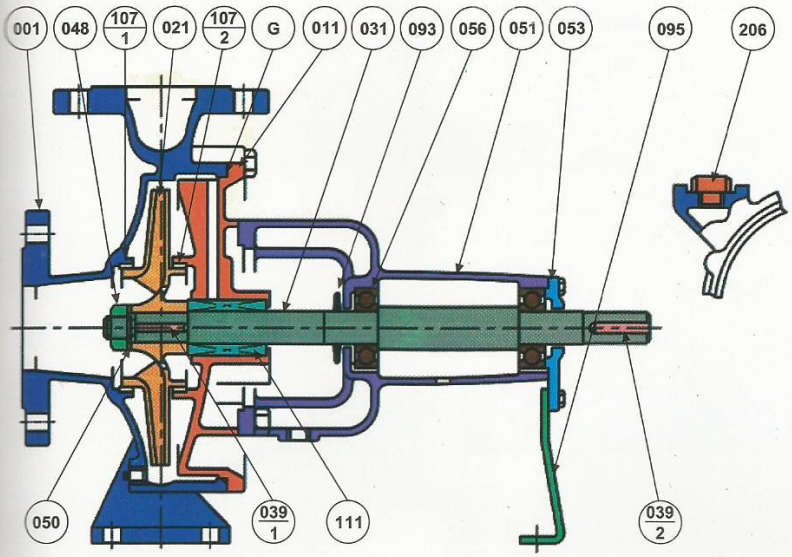

No.	Part Name	Material	Qty
G	O-Ring	Rubber	1
207	Plug	Steel	
111	Mechanical Seal	-	
107-2	Casing Ring	Bronze	
107-1	Casing Ring		
095	Bearing Support	Steel	
093	Deflector	Rubber	
056	Ball Bearing	-	2
053	Bearing Cover	Cast Iron	1
051	Bearing Housing		
050	Impellar Nut Washer	Brass	
048	Impellar Nut		
039-2	Coupling Key	Stainless Steel	
039-1	Impellar Key		
031	Shaft		
021	Impellar	Bronze	
011	Casing Cover	Cast Iron	
001	Casing		

Mechanical Seal Type (Standard)

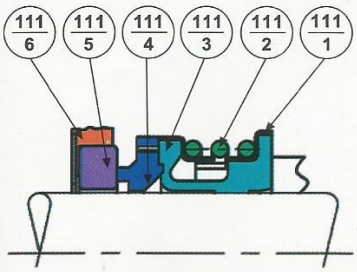

No.	Part Name	Material	Qty
111-6	Cup Gasket	NBR	1
111-5	Matting Ring	Ceramic	
111-4	Seal Ring	Carbon	
111-3	Bellows	NBR	
111-2	Coil Spring	Stainless Steel	
111-1	Spring Holder		

Gland Packing Type (Optional)

With Lantern Ring

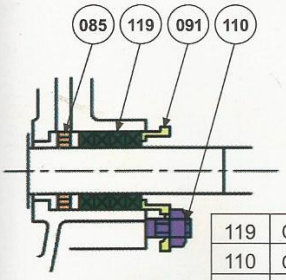

No.	Part Name	Material	Qty
119	Gland Packing	Non-Asbestos	4 or 5
110	Gland Bolt	Brass	2
091	Gland	Bronze	1
085	Lantern Ring		

Pump Model:

50x40 FSHA; 65x50 FSHA, FSJA;
80x65 FSGA, FSHA;
100x80 FSGA; 125x100 FSLA;
150x100 FSKA, FSNA;
150x125 FSKA, FSLA;
200x150 FSJA, FSLA, FSNA;
250x200 FSLA, FSNA.

Without Lantern Ring

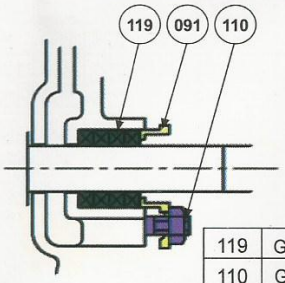

No.	Part Name	Material	Qty
119	Gland Packing	Non-Asbestos	4 or 5
110	Gland Bolt	Brass	2
091	Gland	Bronze	1

Pump Model:

80x65 FSJA, FSKA;
100x65 FSKA;
100x80 FSHA, FSJA, FSGCA, FSHCA;
125x100 FSJCA, FSKA;
150X125 FSHA, FSJA;
200x150 FSHA, FSKA,

DIMENSION

Pump

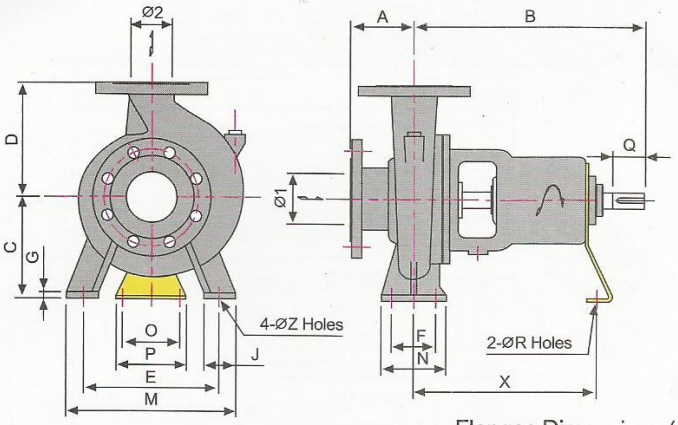

Shaft End

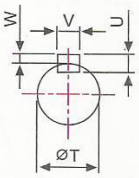

Flange

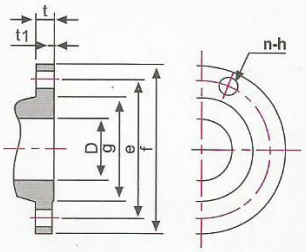

Flanges Dimensions (JIS10K RF)

D mm	f mm	e mm	g mm	t1 mm	t mm	n	h mm
40	140	105	81	2	20	4	19
50	155	120	96	2	20	4	19
65	175	140	116	2	22	4	19
80	185	150	126	2	22	8	19
100	210	175	151	2	24	8	19
125	250	210	182	2	24	8	23
150	280	240	212	2	26	8	23
200	330	290	262	2	26	12	23

Flange Dimensions (JIS16K RF)

D mm	f mm	e mm	g mm	t1 mm	t mm	n	h mm
65	175	140	116	2	22	8	19
100	225	185	160	2	26	8	23
150	305	260	230	2	28	12	25
200	350	305	275	2	30	12	25
250	430	380	345	2	34	12	27

Pump Dimensions

MODEL	SIZE		FLANGE	PUMP															SHAFT					Wt
	ϕ1	ϕ2	STANDARD	A	B	C	D	E	F	G	J	M	N	O	P	R	X	Z	T	Q	U	V	W	Kg
50x40 FSHA	50	40	JIS 10K	80	360	160	180	190	70	12	50	240	100	110	150	17	285	15	24	50	7	8	4	37
65x50 FSHA	65	50	JIS 10K	100	360	160	180	212	70	12	50	265	100	110	150	17	285	15	24	50	7	8	4	42
65x50 FSJA				100	360	180	225	250	95	14	65	320	125	110	150	17	285	15	24	50	7	8	4	49
80x65 FSGA	80	65	JIS 10K	100	360	160	180	212	70	12	50	265	100	110	150	17	285	15	24	50	7	8	4	38
80x65 FSHA				100	360	160	200	212	70	12	50	265	100	110	150	17	285	15	24	50	7	8	4	48
80x65 FSJA				100	350	180	225	250	95	14	65	320	125	110	150	17	285	15	32	80	8	10	5	60
80x65 FSKA				125	470	225	280	315	120	16	80	400	160	110	150	17	370	19	32	80	8	10	5	108
100x65 FSKA	100	65	JIS 16K	125	360	225	280	315	120	16	80	400	160	110	150	17	285	19	38	80	8	10	5	106
100x80 FSGA	100	80	JIS 10K	100	360	160	200	212	95	14	65	280	125	110	150	17	285	15	24	50	7	8	4	49
100x80 FSHA				100	360	180	225	250	95	15	65	320	125	110	150	17	285	15	32	80	8	10	5	62
100x80 FSJA				100	360	200	250	280	120	15	80	360	160	110	150	17	285	19	32	80	8	10	5	70
100x80 FSGCA				125	360	180	225	280	95	14	65	320	125	110	150	17	285	15	32	80	8	10	5	62
100x80 FSHCA				125	360	180	250	280	95	14	65	345	125	110	150	17	285	15	32	80	8	10	5	65
125x100 FSJCA	125	100	JIS 10K	140	360	225	280	315	120	16	80	400	160	110	150	17	285	19	38	80	8	10	5	108
125x100 FSKA				140	470	250	315	315	120	16	80	400	160	110	150	17	370	19	32	80	8	10	5	128
125x100 FSLA				140	530	280	355	400	150	20	100	500	200	110	150	17	370	24	42	110	8	12	5	168
150x100 FSKA	150	100	JIS 16K	140	530	250	315	315	120	16	80	400	160	90	120	15	373	19	42	95	8	12	5	146
150x100 FSNA				180	670	375	450	450	150	20	100	550	200	140	180	19	500	24	48	110	9	14	5.5	365
150x125 FSHA	150	125	JIS 10K	140	470	250	315	315	120	16	80	400	160	110	150	17	370	19	32	80	8	10	5	120
150x125 FSJA				140	470	250	355	315	120	16	80	400	160	110	150	17	370	19	32	80	8	10	5	128
150x125 FSKA				140	530	280	355	400	150	16	100	500	200	110	150	17	370	24	42	110	8	12	5	170
150x125 FSLA				140	530	315	400	400	150	20	100	500	200	110	150	17	370	24	42	110	8	12	5	205
200x150 FSHA	200	150	JIS 10K	160	470	280	355	400	150	18	100	500	200	110	150	17	370	24	32	80	8	10	5	137
200x150 FSJA				160	530	280	375	400	150	18	100	500	200	110	150	17	370	24	42	110	8	12	5	183
200x150 FSKA				160	670	315	400	450	150	20	100	550	200	140	180	19	500	24	48	110	9	14	5.5	222
200x150 FSLA	200	150	JIS 16K	162	670	315	450	450	150	20	100	550	200	140	180	19	500	24	48	110	9	14	5.5	336
200x150 FSNA				182	670	375	560	450	150	20	100	550	200	140	180	19	500	24	60	110	11	18	7	488
250x200 FSLA	250	200	JIS 16K	180	670	385	560	560	250	25	100	660	315	140	180	19	500	24	60	110	11	18	7	505
250x200 FSNA				200	820	435	630	560	250	25	100	660	315	160	200	19	630	27	74	125	12	20	8	642

Unit : mm, unless otherwise stated

EBARA CORPORATION (Head Office, Standard Pump Business Division), Japan
Website : www.ebara.co.jp/en
EBARA PUMPS EUROPE S.P.A. (Brendola office), Italy
Website : www.ebaraeurope.com
E-mail : marketing@ebaraeurope.com
SUMOTO S.R.L., Italy
Website : www.sumoto.com
E-mail : info@sumoto.com
EBARA ESPAÑA BOMBAS, S.A., Spain
Website : www.ebara.es
E-mail : correo@ebara.es
EBARA INTERNATIONAL CORPORATION (Standard Pump Division), U.S.A.
Website : www.pumpsebara.com
E-mail : sales@pumpsebara.com
EBARA INDÚSTRIAS MECÂNICAS E COMÉRCIO LTDA, Brazil
Website : www.ebara.com.br
EBARA MACHINERY (CHINA) CO., LTD, P.R.China
Website : www.ebara.cn
E-mail : emc@ebara.cn
EBARA DENSAN-TAIWAN MANUFACTURING CO., LTD, R.O. China-Taiwan
Website : www.ebara.co.tw
E-mail : sales01@ebara.co.tw
EBARA (THAILAND) LIMITED, Thailand
Website : www.ebara.co.th
E-mail : info@ebara.co.th
P.T. EBARA INDONESIA, Indonesia
Website : www.ebaraindonesia.com
E-mail : marketing@ebaraindonesia.com
EBARA PUMPS MALAYSIA SDN. BHD., Malaysia
Website : www.ebara.com.my
E-mail : sales@ebara.com.my
EBARA BENGUET, INC, Philippines
Website : www.ebaraphilippines.com
E-mail : pumpsales@ebaraphilippines.com
EBARA ENGINEERING SINGAPORE PTE. LTD, Singapore
Website : www.ebara.com.sg
EBARA PUMPS AUSTRALIA PTY. LTD., Australia
Website : www.ebara.com.au

Distributor / Dealer

All specfication subject to change without prior notice.

FS513CT-R0E-010714/3/5000