MK - PT

FEATURE:

- High precision, reliability and super stability
- Design of metal welded stainless steel
- Easy to installation, good interchangeability
- Constructed of excellent capability in anti erosion, moisture proof
- 5 core high quality orange cable
- Suitable in crane, hopper scales, and other special weighing instruments

20-1000 kg

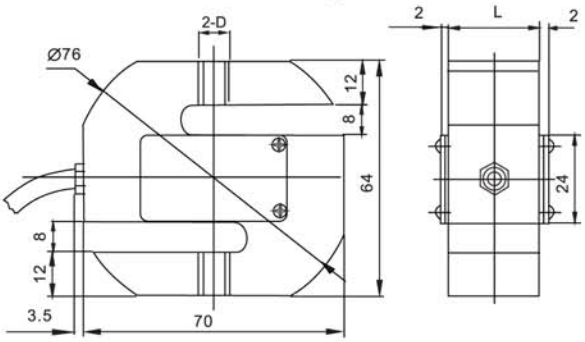

1.2-10 t

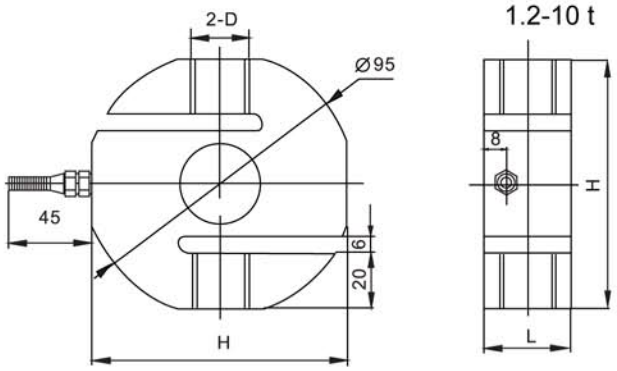

Rated Load (kg)	D	L
20-150	M8	12
200-500	M12	20
700-1000	M12	25

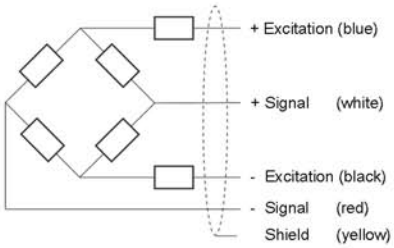

Rated Load (kg)	D(mm)	L(mm)	H
1.2-5	M20	32	90
7.5	M24	40	90
10	M30x2	50	110

SPECIFICATION

Rated capacities (Emax)	20,30,50,75,100,150,200,250,300,500,700,1000kg	Temperature, compensated	-10°C~+40°C
	1.2,1.5,2,2.5,3,5,7.5,10t	Temperature, operating	-30°C~+70°C
Rated Output	2.0±0.003mV/V(20kg-7.5t);1.8±0.002mV/V(10t)	Maximum safe overload	120%F.S
Accuracy class	C3	Ultimate overload	200%F.S
Total error	±0.05%F.S	Excitation, recommended	10-12V DC
Zero balance	±1%F.S	Excitation, maximum	15V DC
TC ZERO	±0.02%F.S/10°C	Protection class	IP65(20-100kg);IP68(1.2-10t)
TC SPAN	±0.02%F.S/10°C	Construction	Nickel Plated Steel
Input resistance	400±20Ω(200-300kg,1.2-10t)	Cable Length	2.6m(20-1000kg),3m(1.2-10t)
Output resistance	352±3Ω	Diameter	Φ5mm(20-1000kg,10t);Φ6mm(1.2-7.5t)
Insulation resistance	≥5000MΩ		